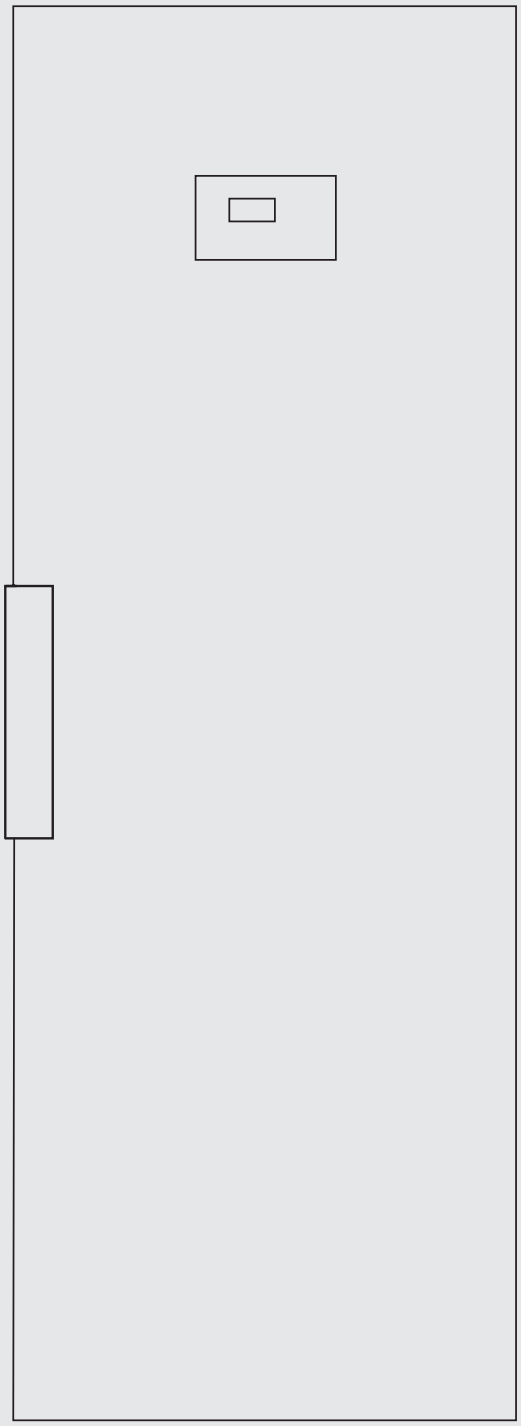

Only use appliance after first reading these instructions!

Warning! Use safety glasses when building this equipment.

USER MANUAL

VORTEX DC2

DEAR CUSTOMER

We are pleased that you have chosen a Ready Rack VORTEX DC2 drying cabinet.

Your new drying cabinet embodies the culmination of extensive years of refinement, characterized by uncompromising excellence throughout its development and manufacturing processes.

Its design meets all the demands of modern laundry care and offers you both automatic and manual programs.

Please read these instructions carefully to enable you to use all the possibilities and advantages of your new VORTEX DC2 drying cabinet. Please pay extra attention to the safety information.

We hope you will be very happy with your new drying cabinet.

Your
Ready Rack Team

©Groves Incorporated 2024

CONTENTS

IMPORTANT SAFETY INFORMATION **5**
- Important safety instructions 6
- Installation and connection 9

FOR A GOOD ENVIRONMENT **10**
- Packaging materials 10
- Management of end-of-life drying cabinet 10

COMPONENTS **11**
- Control panel 12
- Language 13
- Unpacking 14

DOOR REVERSING **15**

INSTALLATION **20**
- Location requirements 20
- Installation instruction 21
- Mounting into custom cabinetry 22
- Ventilation connection 25
- Ventilation requirements 26
- Evacuation / air supply 27
- Connection to evacuation 27
- Electrical connection 29

BEFORE USING THE DRYING CABINET **30**

OPERATION **31**
- Arranging laundry for drying 31
- Cabinet equipped with coat hanger rack and shoe rack 31
- User advice 31
- Air flow 32
- Drying programs 33
- Child lock 34
- Start automatic program 35
- Starting a manual program 35
- User advice 36

CARE **37**
- Cleaning 37
- Replacement part 37

OVERHEAT CUT-OUT **38**

TROUBLESHOOTING **39**

SERVICE AND WARRANTY **40**
- Service 42

TECHNICAL DATA **43**

ACCESSORIES **44**

©Groves Incorporated 2024

THIS USER MANUAL

The contents of this user manual describe the **function** and **operation** of the drying cabinet, as well as instructions for **installation** and **maintenance**.

The following symbols are used throughout the manual and they have the following meanings:

	Information, advice, tip, or recommendation		Warning – danger of hot surface
	Warning – general danger		Warning – danger of fire
	Warning – danger of electric shock		

©Groves Incorporated 2024

IMPORTANT SAFETY INFORMATION

This drying cabinet meets applicable safety requirements. Incorrect use may, however, lead to injuries and damage to objects.

The advice and caution notices in this manual have been written to enable you to avoid incorrect use and unnecessary risks of accidents, and should be read before installing and using the drying cabinet.

CAUTION: This equipment is intended only to be used to dry fabrics washed in water.

- The appliance is not intended for use by persons (including children) with various disabilities or inadequate experience and knowledge.

  They may use the appliance only under supervision or if they have received instructions on how to use the appliance form a person who is responsible for their safety.

  Children must be supervised to ensure that they do not play with the appliance.

- The drying cabinet must be installed and kept indoors. If the power cord is damaged, it must be immediately replaced, and this must be done only by the manufacturer, the manufacturer's service agent or similarly qualified persons in order to prevent danger.

  Follow Ready Rack instructions for repair and replacement of parts.

©Groves Incorporated 2024

IMPORTANT SAFETY INSTRUCTIONS

⚠ **WARNING -** To reduce the risk of fire, electric shock, or injury to persons when using your appliance, follow basic precautions, including the following:

1. Read all instructions before using the appliance.

2. Do not dry articles that have been previously cleaned in, washed in, soaked in, or spotted with gasoline, drycleaning solvents, or other flammable or explosive substances, as they give off vapors that could ignite or explode.

3. Risk of suffocation and injury from entrapment: Do not allow children to play on or in the appliance. Close supervision of children is necessary when the appliance is used near children.

4. Before the appliance is removed from service or discarded, remove the door to the drying compartment.

5. Do not install or store this appliance where it will be exposed to the weather.

6. Do not tamper with controls.

7. Do not repair or replace any part of the appliance or attempt any servicing unless specifically recommended in the user-maintenance instructions or in published user-repair instructions that you understand and have the skills to carry out.

©Groves Incorporated 2024

8. Do not use heat to dry articles containing foam rubber or similarly textured rubber-like materials.

9. Keep area around the exhaust opening and adjacent surrounding areas free from the accumulation of lint, dust, and dirt.

10. The interior of the appliance and exhaust duct should be cleaned periodically.

11. Do not place items exposed to cooking oils in your drying cabinet. Items contaminated with cooking oils may contribute to a chemical reaction that could cause a load to catch fire. To reduce the risk of fire due to contaminated loads, the final part of a drying cabinet cycle occurs without heat (cool down period). Avoid stopping a drying cabinet before the end of the drying cycle unless all items are quickly removed and spread out so that the heat is dissipated.

12. Do not use replacement parts that have not been recommended by the manufacturer (e.g. parts made at home using a 3D printer).

©Groves Incorporated 2024

For a grounded, cord-connected appliance:

GROUNDING INSTRUCTIONS

This appliance must be grounded. In the event of malfunction or breakdown, grounding will reduce the risk of electric shock by providing a path of least resistance for electric current. This appliance is equipped with a cord having an equipment grounding conductor and a grounding plug. The plug must be plugged into an appropriate outlet that is properly installed and grounded in accordance with all local codes and ordinances.

WARNING - Improper connection of the equipment grounding conductor can result in a risk of electric shock. Check with a qualified electrician or service representative or personnel if you are in doubt as to whether the appliance is properly grounded.

Do not modify the plug provided with the appliance: if it will not fit the outlet, have a proper outlet installed by a qualified electrician.

SAVE THESE INSTRUCTIONS FOR FUTURE REFERENCE!

©Groves Incorporated 2024

INSTALLATION AND CONNECTION

⚠ WARNING!

Install the drying cabinet according to the manufacturer's instructions and local codes.

⚠ WARNING!

Drying cabinet installation must be performed by a qualified installer.

⚠ WARNING!

To reduce the risk of severe injury or death, follow all installation instructions.

⚠ WARNING!

Save these instructions.

⚠ WARNING!

Do not install a drying cabinet with flexible plastic venting materials. If flexible metal (foil type) duct is installed, it must be of a specific type identified by the appliance manufacturer as suitable for use with drying cabinets. Flexible venting materials are known to collapse, be easily crushed, and trap lint. These conditions will obstruct drying cabinet airflow and increase the risk of fire.

⚠ WARNING!

- The appliance shall not be exhausted into a chimney, a wall, a ceiling, an attic, a crawl space, or a concealed space of a building;
- Only rigid or flexible metal duct shall be used for exhausting;
- Maximum duct length shall be 8 feet (2.4 m) and maximum number of bends shall be 4;
- The total length of flexible metal duct shall not exceed 8 feet (2.4 m);
- The duct shall not be assembled with screws or other fastening means that extend into the duct and catch lint.

⚠ WARNING!

Do not install a booster fan in the exhaust duct.

©Groves Incorporated 2024

FOR A GOOD ENVIRONMENT

PACKAGING MATERIALS

The packaging that protects the drying cabinet against damage in transit has been chosen with concern for the environment in mind and is therefore recyclable.

Packaging that is returned to the material cycle means reduced consumption of raw materials and a smaller volume of waste.

MANAGEMENT OF END-OF-LIFE DRYING CABINET

When the drying cabinet has reached the end of its useful life, it must be taken to a recycling center for disposal.

Many parts of the drying cabinet can be reused, but it also contains other material that must be handled correctly.

You should therefore never leave the drying cabinet or parts of the cabinet for collection with household waste, as this may lead to risks to health and cause damage to the environment.

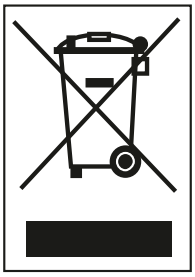

The end-of-life drying cabinet should instead be taken to a recycling center. Check with your dealer if necessary.

All the plastic parts of the drying cabinet are marked with internationally standardised symbols.

The parts of the drying cabinet can therefore be recycled in an environmentally sound manner by waste separation.

©Groves Incorporated 2024

COMPONENTS

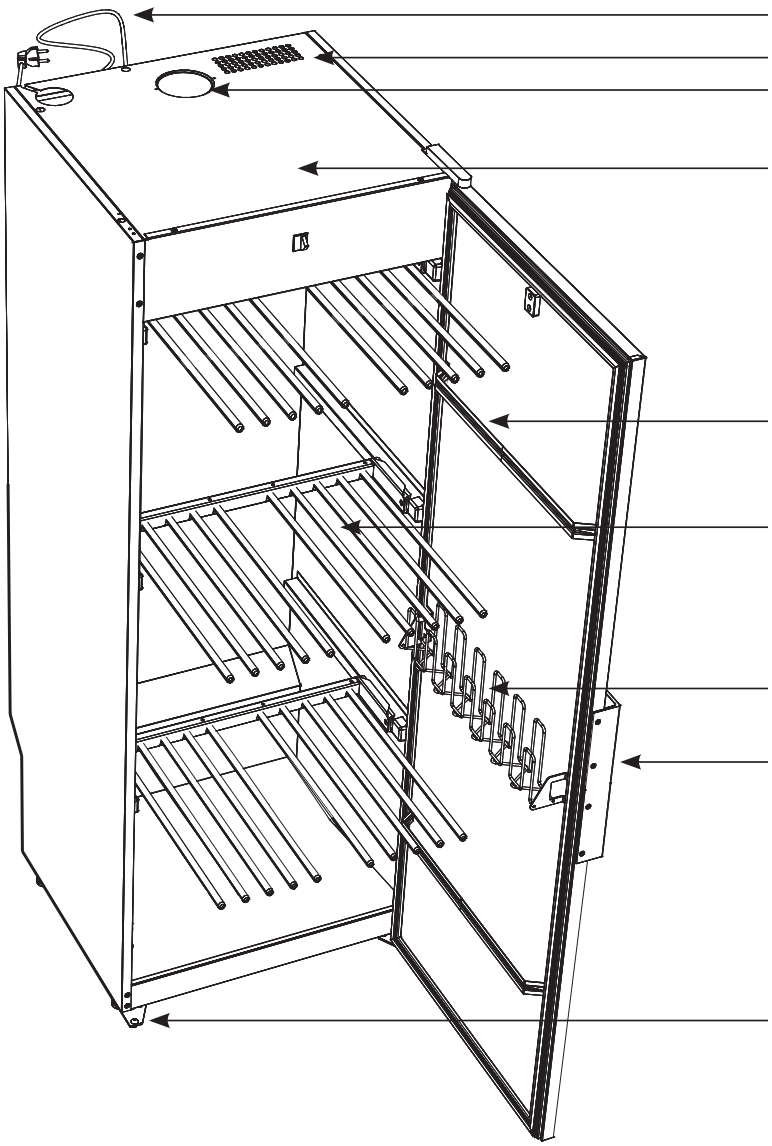

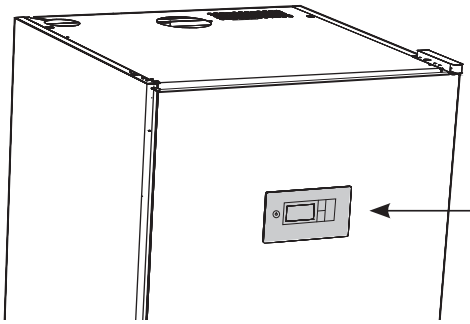

©Groves Incorporated 2024

CONTROL PANEL

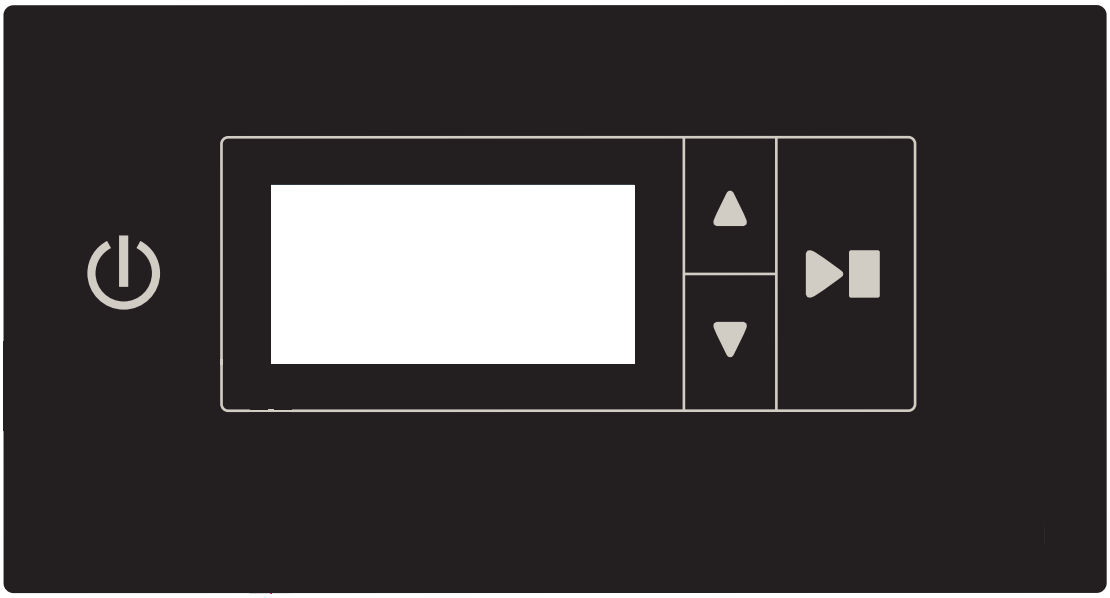

The drying cabinet is equipped with four automatic and four manual drying programs suited to different types of clothing. The programs are set using the buttons on the menu panel.
Four languages can be chosen.

BUTTONS

ON/OFF

START Starts and
STOP Stops the drying program
OK Confirms the selection of programs, functions and settings

UP ARROW, increase values or browse between programs.

DOWN ARROW, reduce values or browse between programs.

DISPLAY
The display has two rows with 6 characters on each row. During the drying process the selected drying program and a rolling bar indicating that the process is in progress are shown.

LANGUAGE

The following languages can be chosen: English, Swedish, Norwegian, Danish, Finnish, Italian, French, German, Spanish, Portuguese and Dutch.

SETTING

1. Make sure that the **ON/OFF** switch on the drying cabinet is off. The display is unlit.

2. Hold down the **UP ARROW** and **DOWN ARROW** buttons and press the **ON/OFF** switch to the “ON” position. The display lights up and on the top row shows “P105” flashing, which is the parameter for language setting. If a different value is shown, use the **UP ARROW** or **DOWN ARROW** buttons to browse to the correct parameter.

3. Press **START/STOP** to confirm. The row for current language now flashes. The languages have a numerical symbol as shown in the list below.

4. Browse to the desired language with the **UP ARROW** or **DOWN ARROW** buttons.

5. To save the set value, press **START/ STOP.**

6. To return to operating mode, press **DOWN ARROW** and **START/STOP**.

Language symbol	Display Language
0	English
1	Swedish
2	Norwegian
3	Danish
4	Finnish
5	Italian
6	French
7	German
8	Spanish
9	Portuguese
10	Dutch

©Groves Incorporated 2024

UNPACKING

CAUTION!

The drying cabinet must be handled carefully if it is standing unsupported on its pallet.

RISK OF TIPPING OVER

Make sure that the product has not been damaged in transit. Any damage incurred in transit must be reported to the dealer within 7 days.

After unpacking, check that the product is intact. Damage, defects and any missing parts must be reported to the dealer immediately.

Check that all transport securing devices have been removed before connecting the drying cabinet.

Packaging materials such as plastic and styrofoam should be kept out of the reach of children.

Complete delivery must include:

- Cabinet with installed fan unit
- Assembly kit
- User Manual

ASSEMBLY KIT

- for cabinet

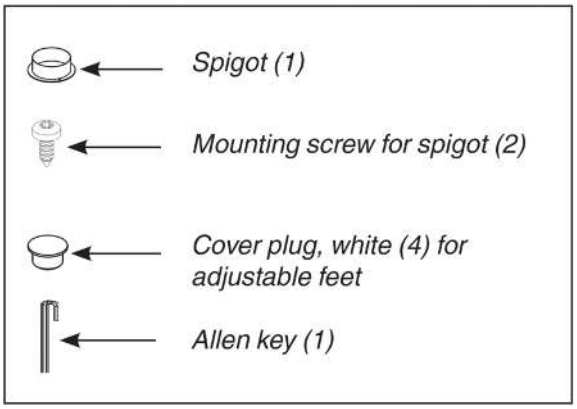

- for attachment to wall

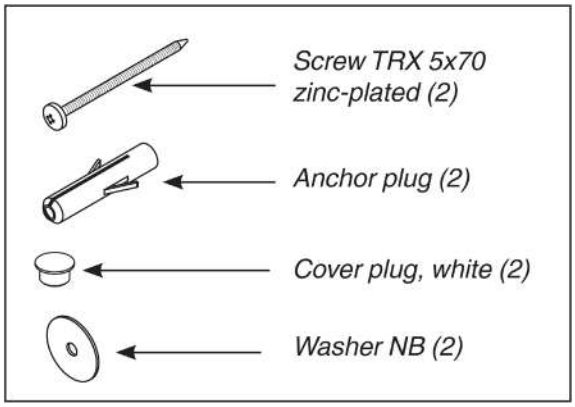

- not supplied with a drying cabinet

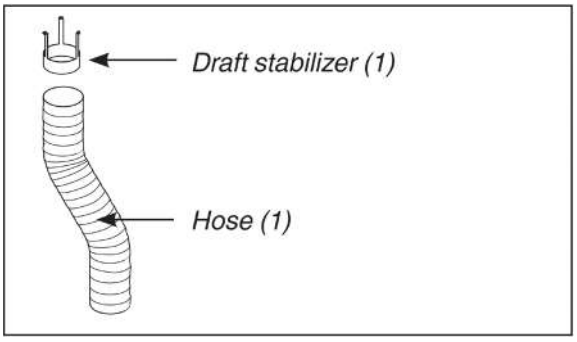

DOOR REVERSING

The pictures below illustrate reversing the door from right to left hinge.

Contact your dealer to order a door reversing kit

For reversing, a door reversing kit must be ordered from the supplier of the cabinet. The kit consists of a new upper hinge, as the left and right hinges are not interchangeable. The kit also includes a control cable for fitting in the door with associated hinge bushing.

Lay the cabinet down carefully on its back on a soft surface (e.g. a carpet or thick blacket)

1. Remove the cover in the top of the drying cabinet. This is attached with five screws at the marking arrows.

2. Remove the protective cover **(1)** of the upper hinge and release the control cable **(2)**.

3. Separate the control cable from the fan unit with the quick connector **(3)** and pull the cable through the hole **(4)**.

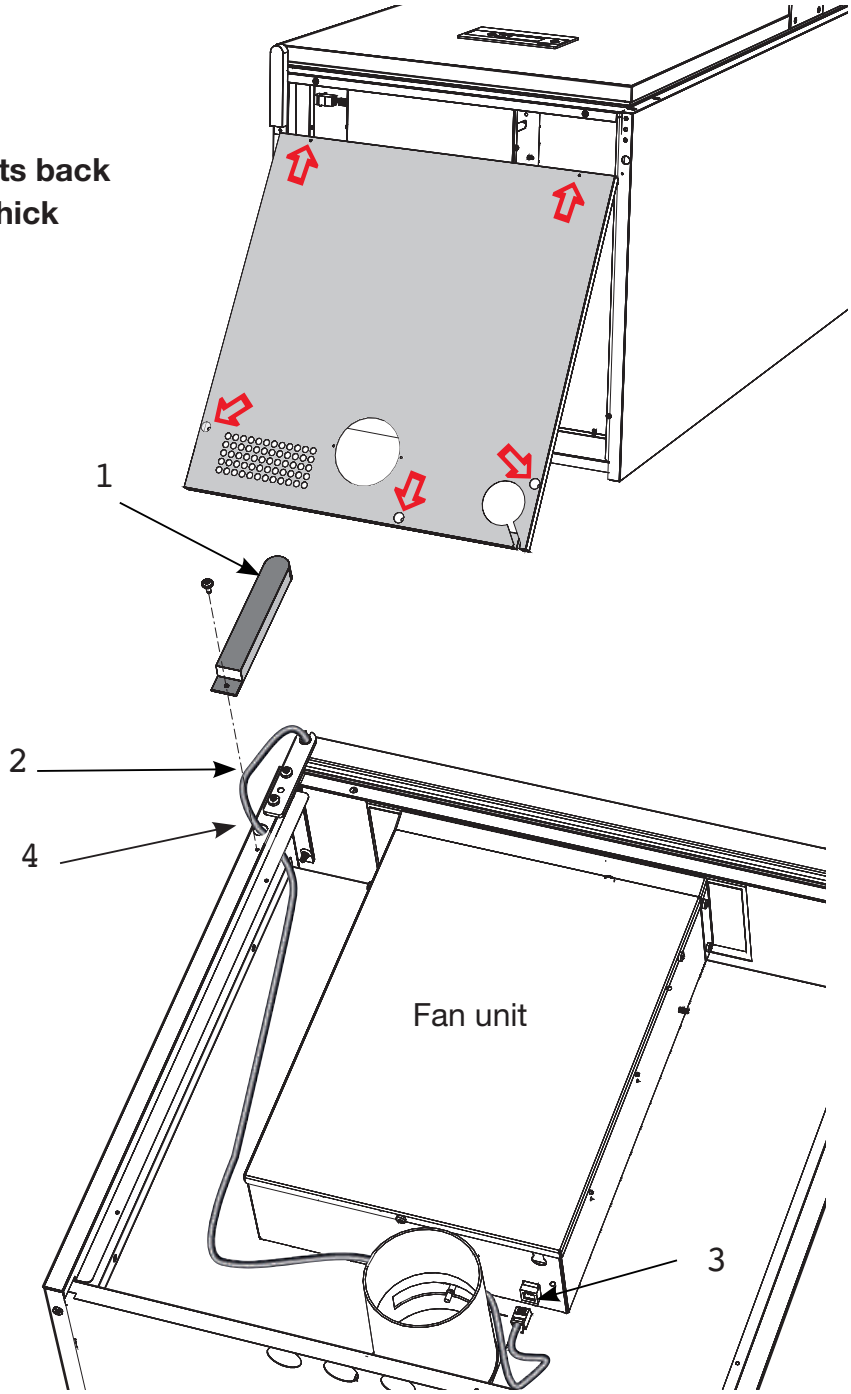

©Groves Incorporated 2024

4. Unscrew the lower hinge pin **(5)**. Raise the door slightly from the bottom edge and detach it from the upper hinge, to the extent that the hinge pin is visible. The pin has a recess for the control cable.

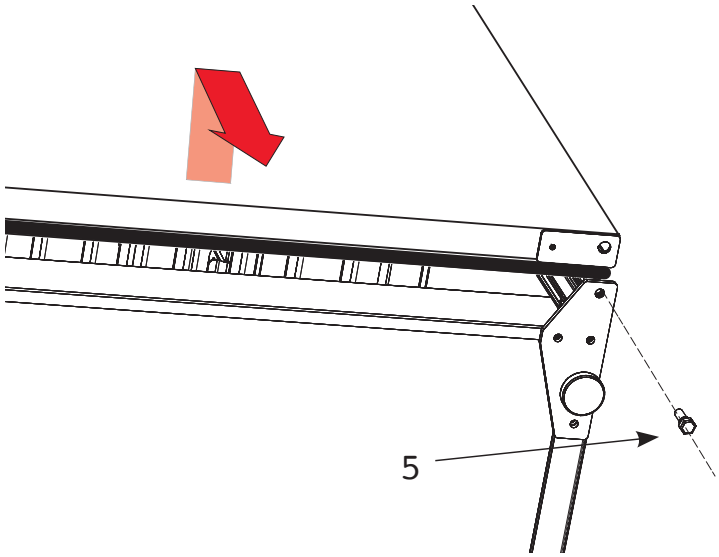

5. Carefully pull the control cable **(6)** out of the recess in the hinge pin.

6. The door, together with the control cable, is now free and can be set aside.

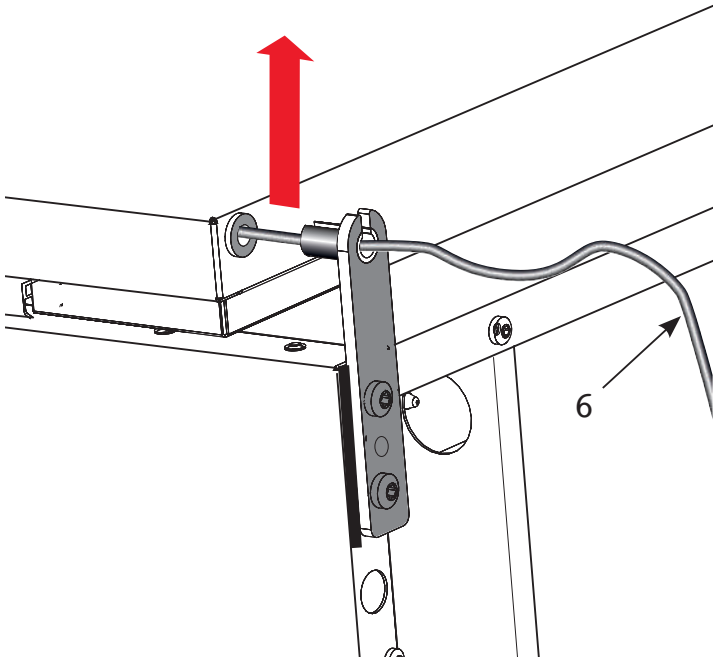

Upper hinge joint with the door pulled down so that the hinge pin is freed

7. Detach the upper hinge **(7)** with hinge washer **(8). Discard the hinge.**

8. Install the new replacement hinge on the opposite side and move the hinge washer across.

   The hinge forms part of the door reversing kit, which can be ordered from the dealer of the drying cabinet.

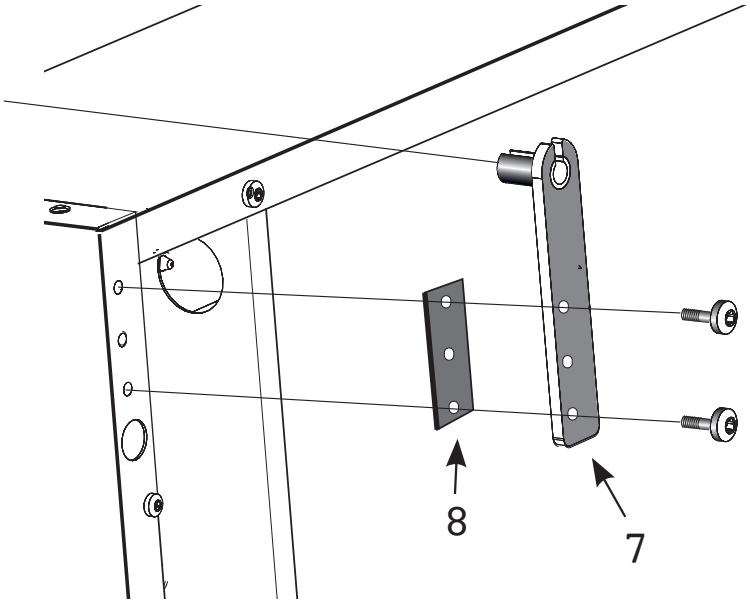

©Groves Incorporated 2024

9. Lay the door down with the inside facing up on a non-damaging surface.

10. Detach the inner plate **(9)** with **magnetic strip**, **door hangers/ door bar** and **glove hangers/ door hooks**. Screws are beneath the magnetic strips.

    Remove the insulation **(10)**.

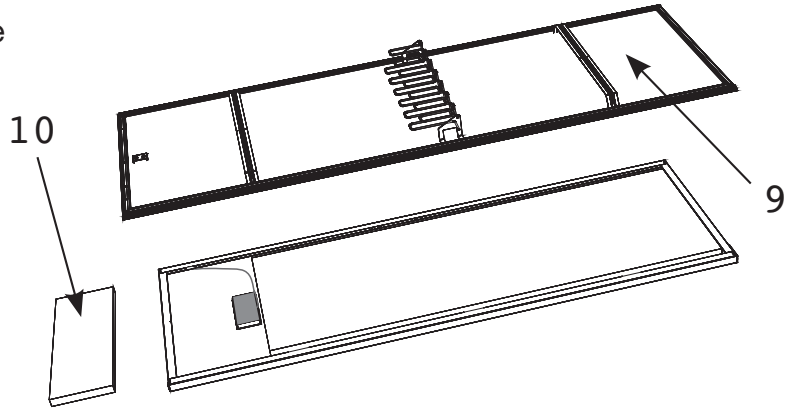

11. Detach and transfer the **reinforcement panel and lower hinge bushing (11)** in the door to the opposite side.

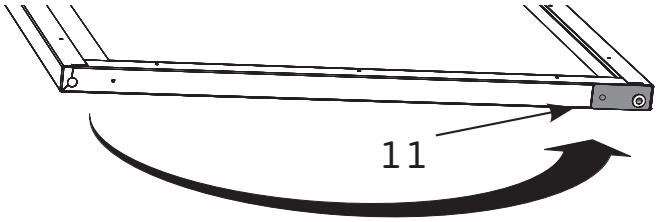

12. Detach existing control cable from control panel and pull cable out with hinge bushing **(12)**. Discard the cable as there is a new complete cable in the door reversing kit.

    Fit the new cable on the opposite side - press the bushing firmly into the hole and connect the cable to the control panel outlet.

13. Move back the **insulation** and **inner plate** with **magnetic strips** and, if applicable, **hangers**.

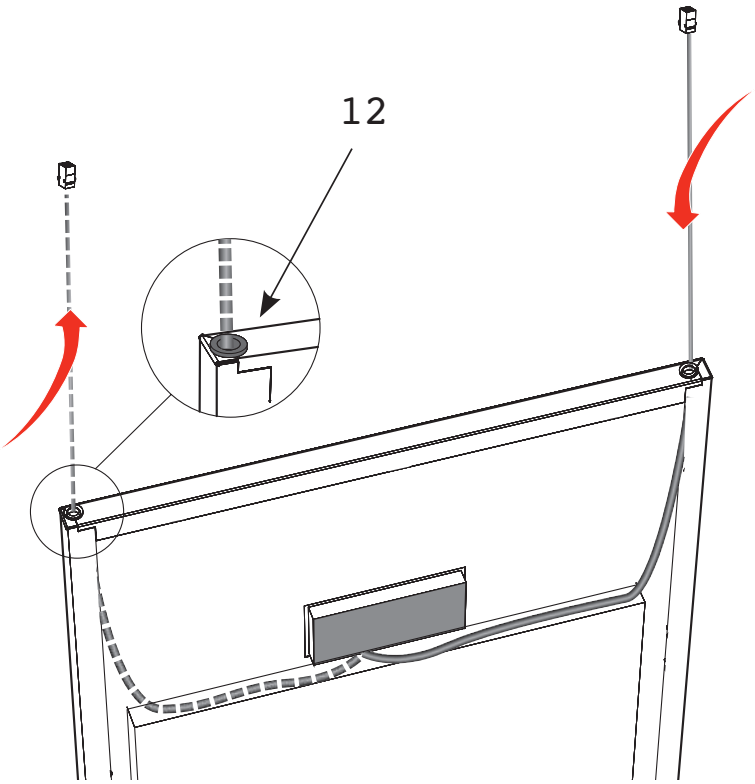

14. Introduce the operating cable through the recess in the new upper hinge and slide the door up on the hinge pin.

15. Install the lower hinge pin. **Make sure that the hinge pin is tightened firmly.**

16. Connect the control panel **(13)** to the connector in the upper part of the drying cabinet.

17. Refit the drying cabinet cover which was removed under 1.

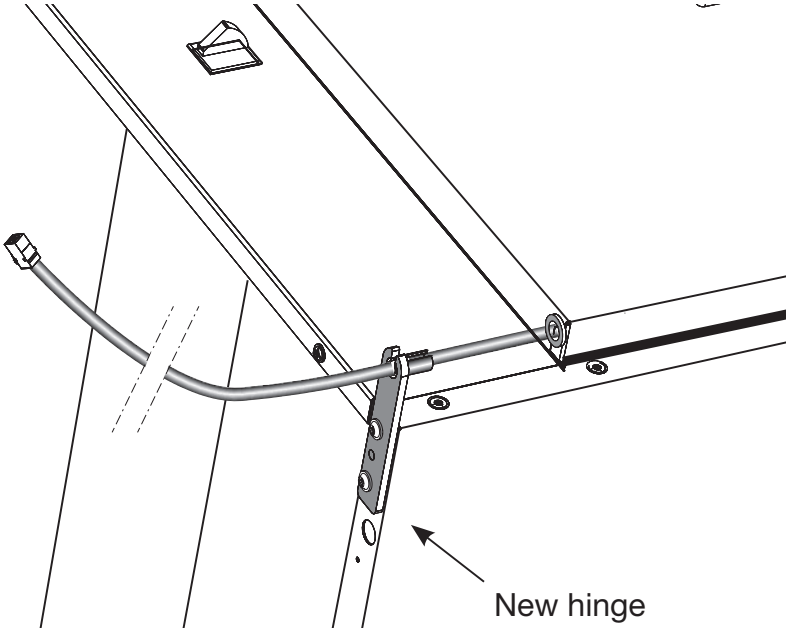

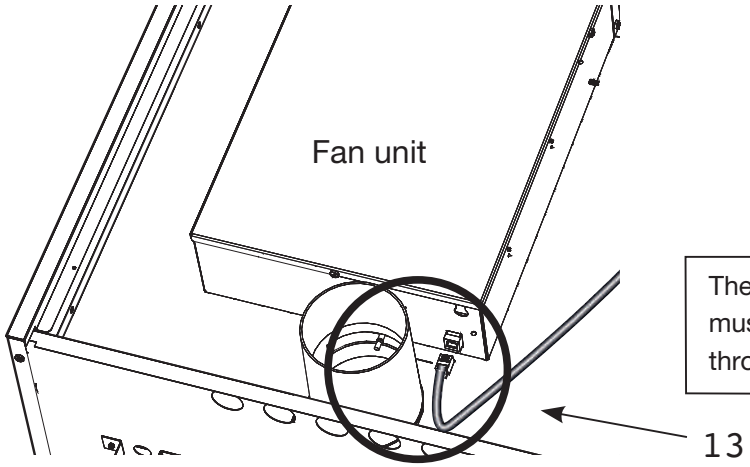

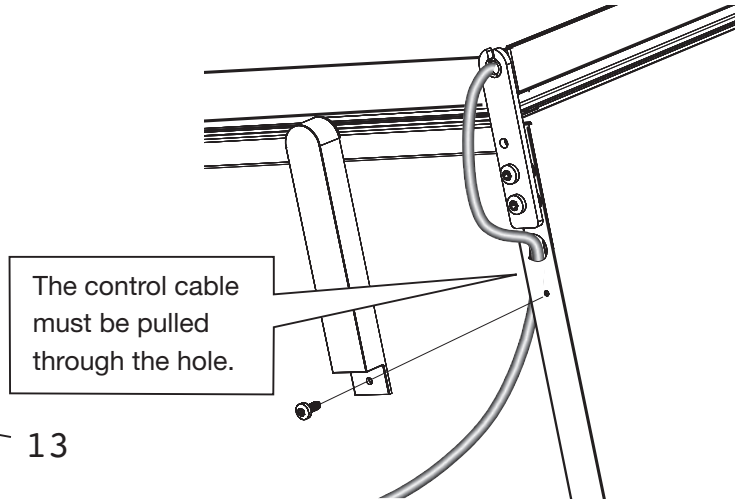

18. Transfer the handle **(14)** to the other side. Fit the cover plugs for the old holes by hand. Cover plugs are supplied in the assembly kit.

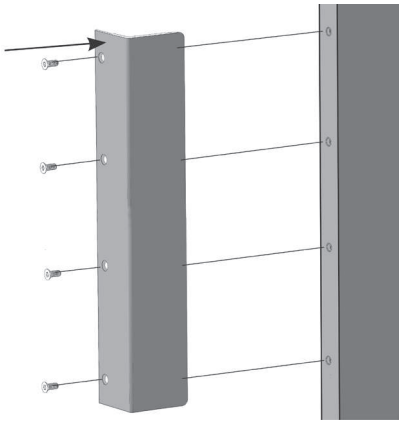

⚠ WARNING!

The drying cabinet must not be used without being attached to a wall owing to the risk of tipping over forward.

19. Raise the cabinet and place it in position and **secure the cabinet to the wall.**

©Groves Incorporated 2024

INSTALLATION

LOCATION REQUIREMENTS

- If the drying cabinet is to be installed connected to air exhaust ventilation, this must be available in the room.
- There must be a grounded outlet socket within a distance of 78¾” (2 m) from the upper part of the drying cabinet. The drying cabinet has a 78¾” (2 m) long grounded outlet lead with a plug connected.
- The power cord should be located such that there is no need for an extension cable.
- It must be possible to reach the outlet easily after the drying cabinet has been installed.
- This must also be kept in mind if the drying cabinet is built into woodwork or similar. See also the section on ‘Electrical connection’.
- The floor where the cabinet is located must withstand a weight of around 132.28 lbs (60 kg).
- The floor must be level with a max drop of 63/64” (2.5 cm) under the cabinet.
- The drying cabinet is intended only for installation indoors with a temperature above 32°F (0°C).
- The drying cabinet must not be placed in an environment in which high-pressure water is used for cleaning.

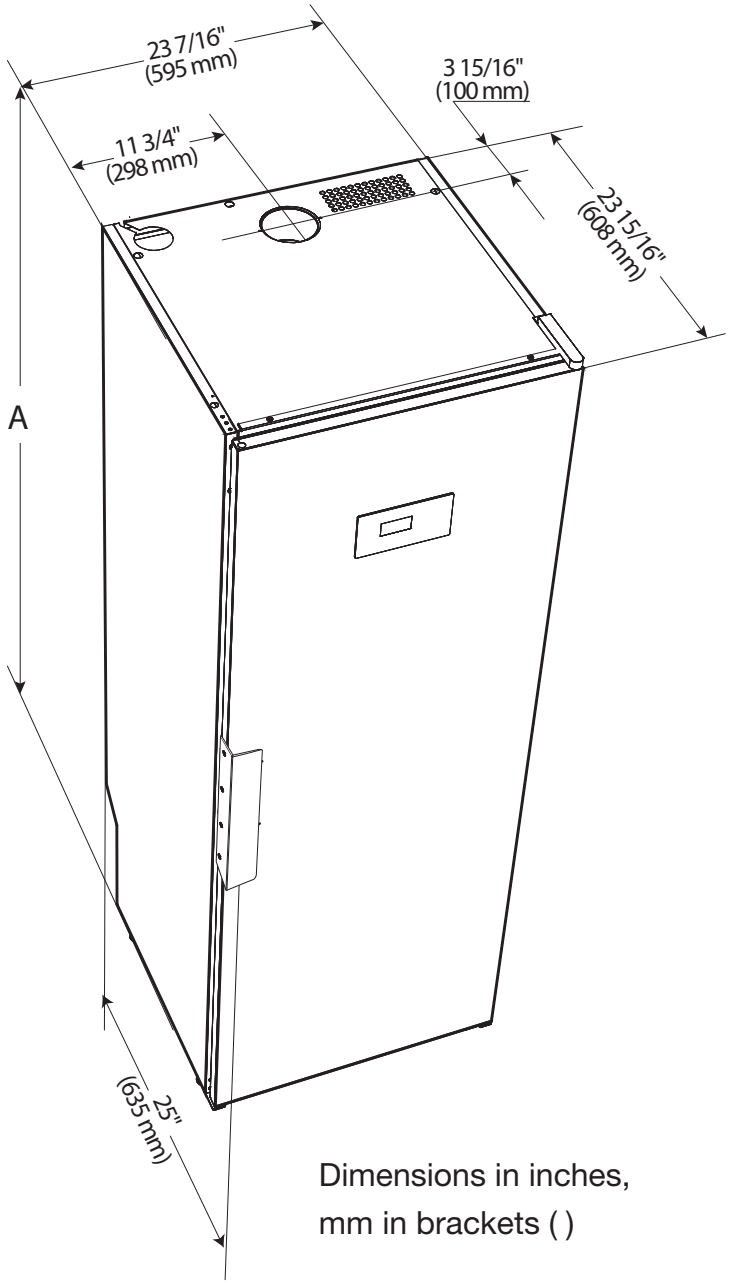

Dimensions in inches, mm in brackets ( )

Cabinet designation	A inch (mm)
235005	727⁄16” (1840 mm)

INSTALLATION INSTRUCTION

Instruction for installing the drying cabinet next to washing machines and tumble dryers.

If your washing machine is slightly less deep than the drying cabinet you only have to fix the drying cabinet to the wall and place the other appliances next to it.

If your washing machine is deeper than the drying cabinet you will need to add a distance (wood stud for example) to achieve aligned installation together with the other appliances.
In this example we are adding a 12 inch (307 mm) distance.

The distance should be attached to the wall for fixed installation.

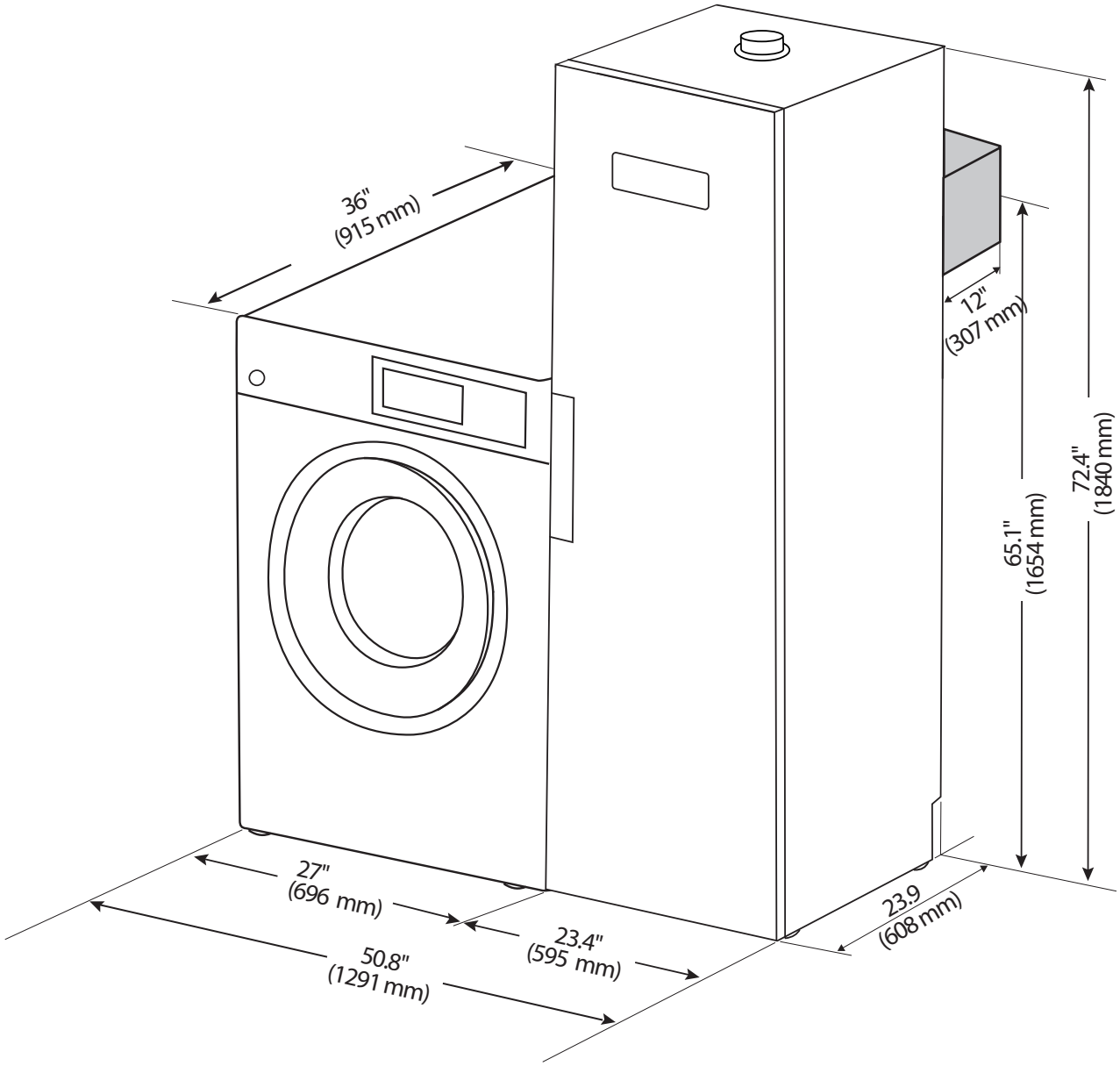

©Groves Incorporated 2024

MOUNTING INTO CUSTOM CABINETRY

1. Keep the door taped closed until the cabinet is in place. Slide the drying cabinet in so that it is flush and centered with the cabinet face.

2. Plug in the power cord to the electrical outlet, making sure that the cord is not crimped and that the plug can be easily unplugged without moving the unit.

3. Remove the tape and open the door. Pull out the upper hanger section. Measure and note the distance between the drying cabinet's rear wall and the wall behind the drying cabinet. See dimension "**A**" in the figure.

4. Mark the location of the holes on the wall with a pencil.

5. Push back the hanger section, close the door and tape it closed. Pull out the entire drying cabinet.

6. Use a wood shim with thickness "A" according to point 3 as a gauge block. The shim must:
   a) be divided into two parts for allowing free air flow behind the drying cabinet. Length ~6 in. (15 cm) each.
   b) have a thickness of minimum ½" (13 mm).

7. Screw the shims with two screws each to the wall behind the drying cabinet so that it covers the marked holes according to point 4. Use screws with appropriate length.

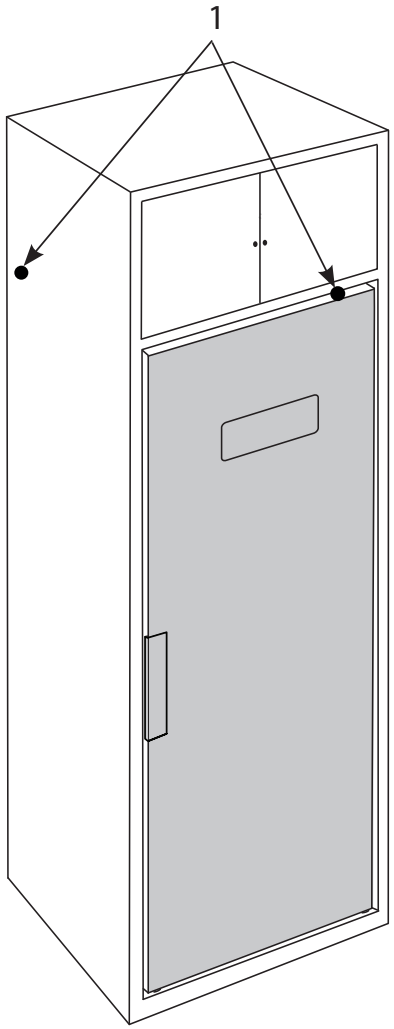

Slide the drying cabinet in so that it is flush and centered with the cabinet face.

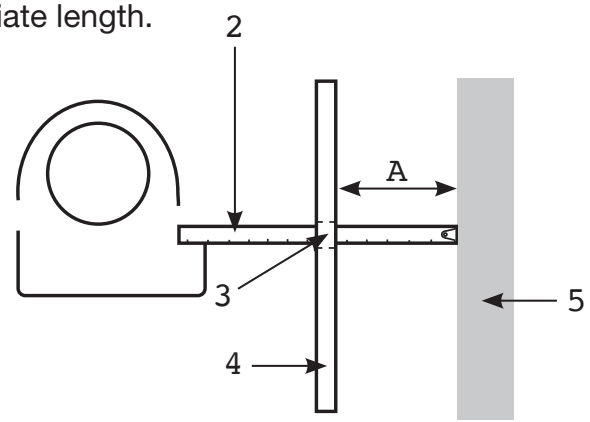

1. *Minimum ventilation openings in the top and between the cabinet and the rear wall must be ½" (13 mm).*
2. *Tape measure*
3. *Mounting hole*
4. *Rear drying cabinet wall*
5. *Wall behind drying cabinet*

8. Push the drying cabinet back into its final location. Remove the tape that holds the door closed and check that the shims are aligned with the back of the drying cabinet. Also check that the drying cabinet's front section fits properly into the custom cabinetry.

9. **Level** the drying cabinet according to section "Levelling".

10. Pull out the upper hanger section and drill assembly holes in the wood shims for the mounting screws through the predrilled holes in the back of the drying cabinet.

11. Secure the cabinet with the supplied screws and associated washers.

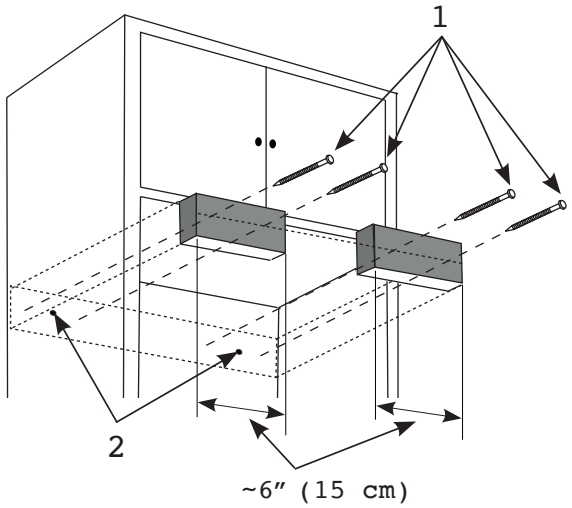

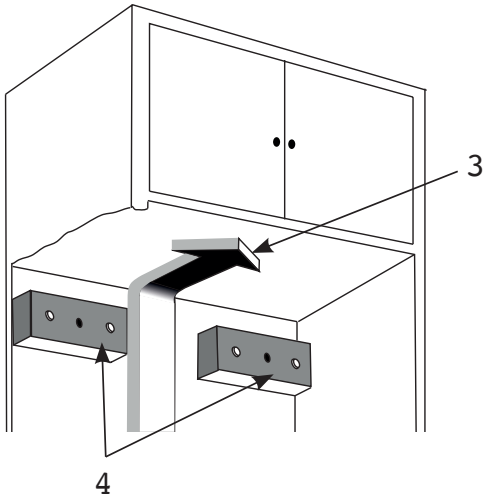

Custom cabinetry with mounted wood shims allowing free airflow.

⚠ IMPORTANT!

Check that the shims are properly secured to the rear wall and that the installation screws do not obstruct the drying cabinet's mounting holes.

The wood shims are not included in the delivery.

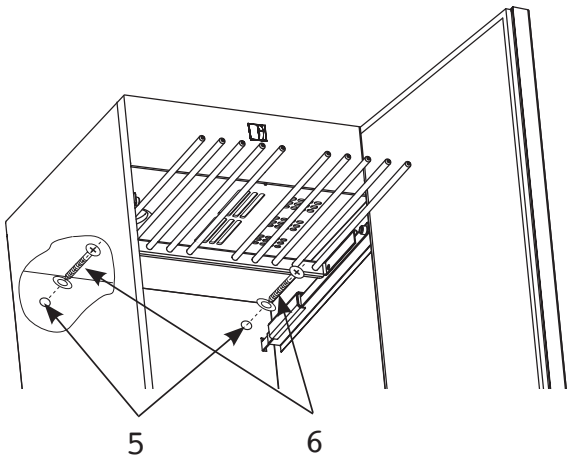

1. *Fastening screws*
2. *Mounting hole markings from the predrilled holes in the rear drying cabinet wall.*
3. *Air flow*
4. *Wood shims*
5. *Pre-drilled holes*
6. *Retaining screws with washers*

©Groves Incorporated 2024

The drying cabinet is intended only for use indoors in a dry place.

Do not place the drying cabinet in an area where high-pressure washing is used for cleaning.

To reduce the risk of fire, this appliance must be fastened or otherwise secured to an uncovered concrete floor.

LEVELLING

The drying cabinet must be **level on a flat surface**, resting on all four feet. Use the Allen wrench supplied and adjust the feet through the holes in the baseplate of the drying cabinet. Press the four covering plugs firmly into the holes after adjustment.

SECURING TO WALL

The cabinet must be **secured to a wall** to prevent it from tipping over.

1. Open the door, pull out the upper hanging section and drill 8 mm holes in the wall through the two pre-drilled holes in the drying cabinet with extended upper hanger section rear of the drying cabinet **(1)**.

2. Fit the plastic plugs in the wall (if necessary). Fit the screw with the flat washer as illustrated. Cover the holes with the cover plugs. Screws for fixing, washers and plastic plugs are provided in the assembly kit.

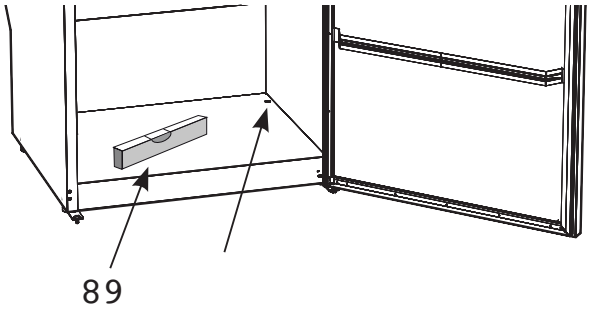

⚠ CAUTION!

The drying cabinet must not be used without being attached to a wall to avoid the risk of tipping over forward.

The installation is not complete and the cabinet must not be used until the drying cabinet has been attached to the wall according to the installation instructions. The illustration shows the attachment points.

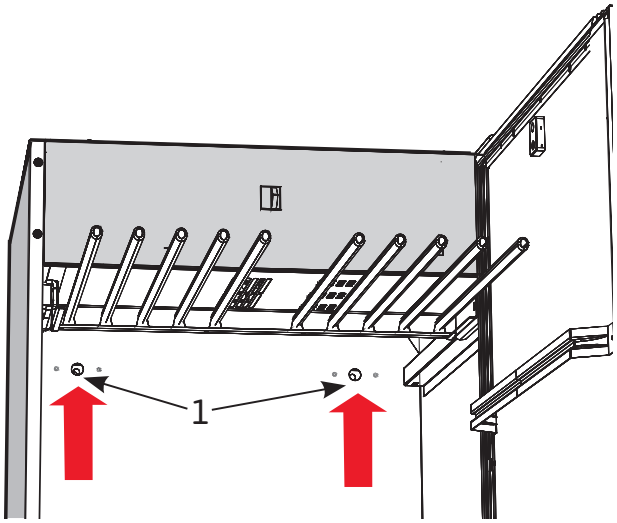

Drying cabinet with extended upper hanger section

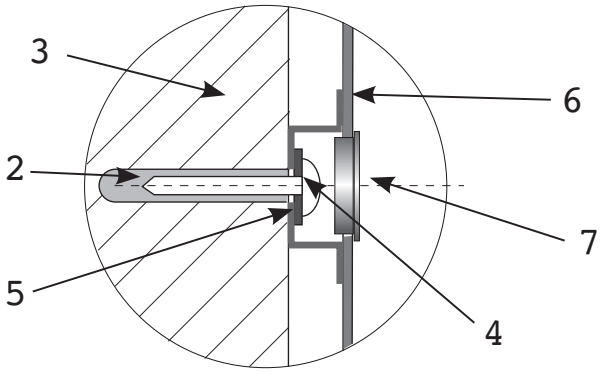

1. *Pre-drilled holes*
2. *Wall plug*
3. *Wall behind drying cabinet*
4. *Fixing screws*
5. *Washer*
6. *Rear wall of drying cabinet*
7. *Cover plug*
8. *Spirit level*
9. *Cover plug*

©Groves Incorporated 2024

VENTILATION CONNECTION

If the drying cabinet is installed in a custom cabinetry, fit the exhaust collar through the vent opening in the upper part of the cabinetry when the drying cabinet is moved to its final location.

The exhaust collar is designed to be screwed in place with two screws to the drying cabinet's top plate. There are predrilled holes in the exhaust collar and top plate.

1. Place the exhaust collar over the hole in the drying cabinet's top plate, align the screw holes and screw the exhaust collar into place.

2. Connect the vent pipe if the drying cabinet is built in, or press the supplied (only certain markets) flexible hose into place. See the section "Ventilation requirements".

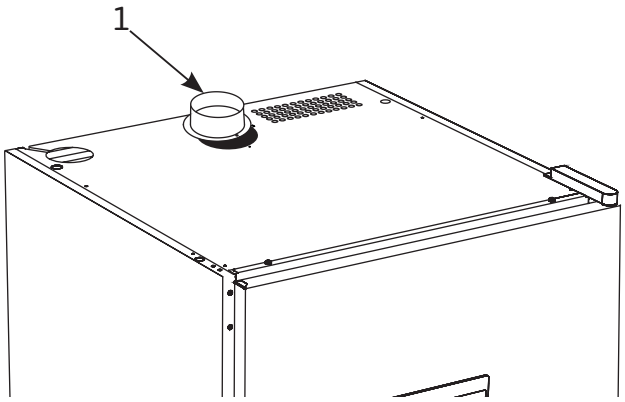

1. Exhaust collar

©Groves Incorporated 2024

VENTILATION REQUIREMENTS

Moist air can be discharged in two ways:

- Ventilation out into the room where the drying cabinet is located
- Connection to a vent duct (exhaust air ventilation)

VENTILATION OUT INTO THE ROOM WHERE THE DRYING CABINET IS LOCATED

It is advisable to open a door or window in the room for optimal ventilation.

- When the drying cabinet is built in, the supplied vent hose (only certain markets) is replaced by a solid vent pipe with a diameter of 4 in.(10.2 cm). The vent pipe should not exceed 3 ft (91.4 cm) in length.
- The distance between the vent pipe's upper edge and the ceiling must not be less than 1 foot (30 cm).
- The vent pipe must extend beyond the enclosing cabinet work.
- Provide appropriate air supply to the drying cabinet's air intake.

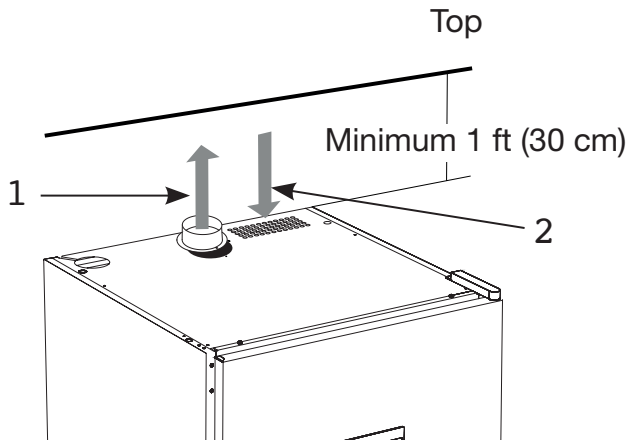

Ventilation out into the room where the drying cabinet is located. Drying cabinet not built in.

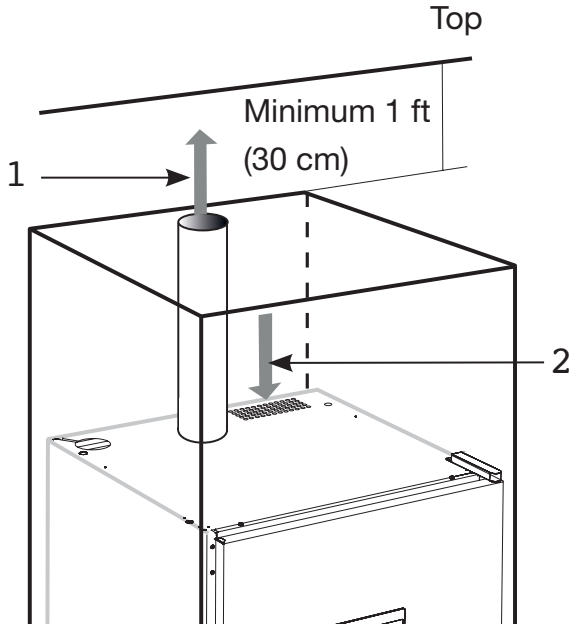

Ventilation out into the room where the drying cabinet is located. Built-in drying cabinet in custom cabinetry.

1. *Moist air out*
2. *Air intake*

EVACUATION / AIR SUPPLY

⚠ CAUTION!

Please ensure all local building code requirements are met during installation.

When the cabinet is on, $1589^{5}/_{32}$ ft^3 (45 m^3) moist air per hour is evacuated. It must therefore be ensured that air can enter the room to replace the moist air that is vented out.

CONNECTION TO EVACUATION

The drying cabinet can be connected to the evacuation duct in **two ways**, either with a **draft stabilizer** or **permanently fitted to a mechanical exhaust ventilation unit.**

If the drying cabinet is to be connected to an existing ventilation system, a draft stabilizer must always be used, so that the general ventilation in the room is not affected.

Permanent fitting must only be carried out when a separate exhaust-air duct is routed to the drying cabinet, the air flow in the exhaust-air duct being adjusted to $1589^{5}/_{32}$ ft^3 (45 m^3) per hour.

The drying cabinet has been tested and factory-set for connection with a draft stabilizer.

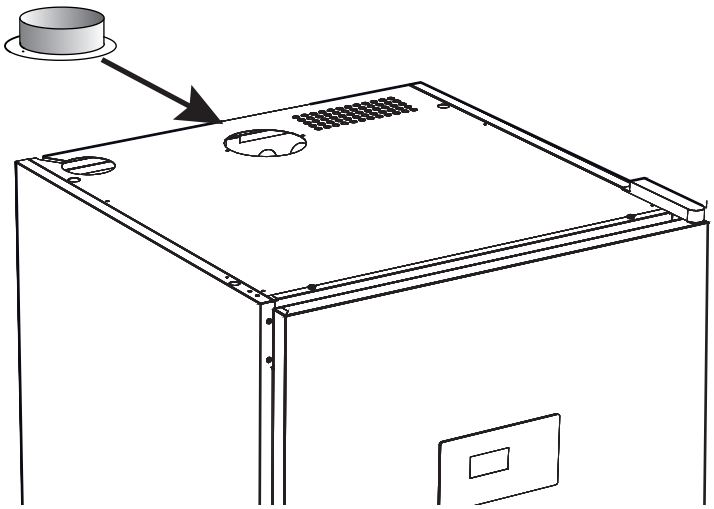

Place the supplied spigot over the hole on the top of the cabinet, insert the screws and secure the spigot.

©Groves Incorporated 2024

WITH DRAFT STABILIZER

* Hose and draft stabilizer not included.
Fit duct hose onto the spigot. Connect the other end of the hose to the draft stabilizer and then secure this on the exhaust vent in the room.

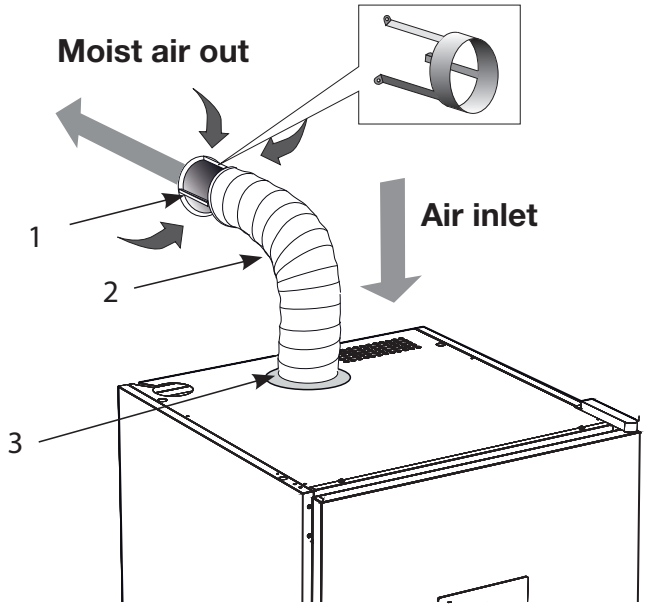

The drying cabinet must not be connected to a flue.

The air inlet must not be blocked.

1. *Draft stabilizer*
2. *Flexible hose*
3. *Spigot*

PERMANENTLY FITTED TO MECHANICAL EXHAUST AIR VENTILATION UNIT

* Hose and adapter not included.

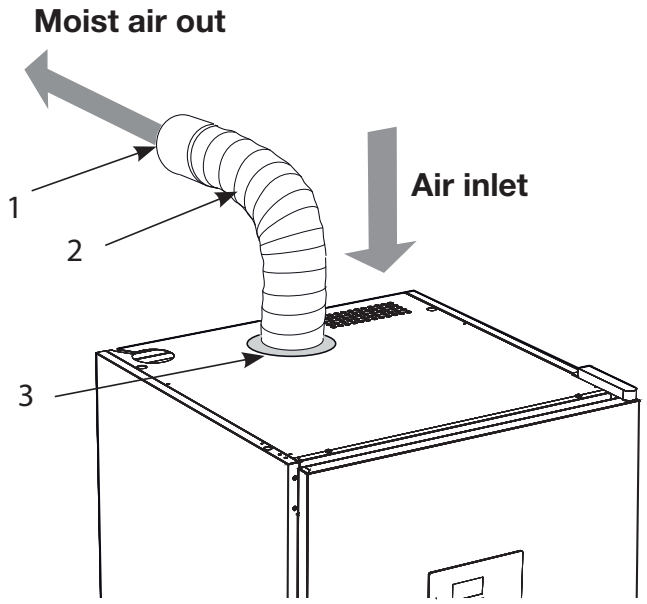

When the cabinet is permanently connected to a ventilation duct, the whole room is ventilated through the drying cabinet. Connect the hose to the adapter between the hose and the ventilation duct.

The air inlet must not be blocked.

1. *Adapter*
2. *Hose*
3. *Spigot*

ELECTRICAL CONNECTION

⚠ CAUTION!

Read the Electrical Requirements and Grounding instructions before connecting the drying cabinet.

The drying cabinet should be connected to a grounded wall socket using the supplied power cord and must not be permanently wired.

The outlet should be located so that the plug can be easily pulled out if necessary.

Check that the supply current matches the data on the rating plate and that the outlet is grounded correctly according to local code. We recommend that the power cord be fitted with a **residual current device (RCD)**.

The drying cabinet must be connected to a dedicated circuit.

Do not connect the drying cabinet to the power supply with an extension cord as the necessary safety cannot be guaranteed (risk of overheating).

The appliance's connection to power supply should comply with the relevant electrical safety regulations.

The drying cabinet is connected to a 120 V single-phase 60 Hz and protectively grounded wall socket.

Fuse 13 A .

The drying cabinet is supplied ready for connection with a power cord and a grounded plug.

The manufacturer disclaims all liability if the electrical connection has not been carried out in the way described in this use and care manual.

If the power cord is damaged for any reason, it must be replaced. Original spare part is available from the drying cabinet dealer.

A damaged power cord may only be replaced by a person authorized by the manufacturer.

⚠ CAUTION!

A damaged connecting cable may only be replaced with a special connecting cable of the same type (can be ordered from your dealers spare parts department). For safety reasons, the replacement may be carried out only by a qualified electrician.

©Groves Incorporated 2024

BEFORE USING THE DRYING CABINET

Read this User Manual before starting the drying cabinet.

⚠ CAUTION!

Read the safety instructions (see the chapter ”IMPORTANT SAFETY INFORMATION”) before using the drying cabinet.

- Make sure that the cabinet is firmly attached to the wall. See the chapter “PLACEMENT”.
- Make sure that no packaging material has been left behind.
- Use a mild detergent with hot water and wash the inside and outside of the drying cabinet. Dry carefully. See also the ‘Care’ section later in the manual.

⚠ WARNING!!

To reduce the risk of electric shock or injury to persons, read the ”IMPORTANT SAFETY INSTRUCTIONS” section before operating this appliance.

ARRANGING LAUNDRY FOR DRYING

There are three sections with hangers in the cabinet. Each section has a number of rails for hanging laundry.

- Hang the items in the drying cabinet according to how much space they require - not according to their weight.
- For most efficient drying, do not lay item flat on the upper hanger section.
- Place long items of clothing closest to the walls of the cabinet and shorter items towards the center of the cabinet. The most efficient drying results are achieved by hanging the items in this way.
- Fold up the two bottom hanger sections if long items are to be dried.
- Hang gloves, caps, scarves and similar items on the door hangers/glove hangers on the inside of the door.
- To make it easier, extend the hanger section when hanging laundry.
- Do not overload the drying cabinet. If you do, the laundry will become creased and dry unevenly. Instead, leave a space between the items of clothing if possible.
- If there is a risk of particular items shedding color, free space should be left around them.
- Avoid drying heavy items of clothing together with lighter items as they have very different drying times.
- Do not hang knitted items. These will stretch unnecessarily as they are heavy when wet.

DRYING USING SINGLE BAR

- To enhance the drying efficiency of bulkier suits or PPE, use single bar.

DRYING USING SHELVES

- Use the ventilated shelves for more efficient drying of larger accessories.

USER ADVICE

- Always following the laundry instructions on the item of clothing if present.
- If a fabric conditioner or anti-static agent is used, follow the manufacturer’s instructions for use of this product.
- Remove laundry that it is already dry. This will reduce drying time for remaining laundry.

©Groves Incorporated 2024

AIR FLOW

The illustration shows the air flow in the drying cabinet.

Keep the area around the evacuation duct clear of dust and dirt.

Make sure that the air intake and exhaust duct are not blocked.

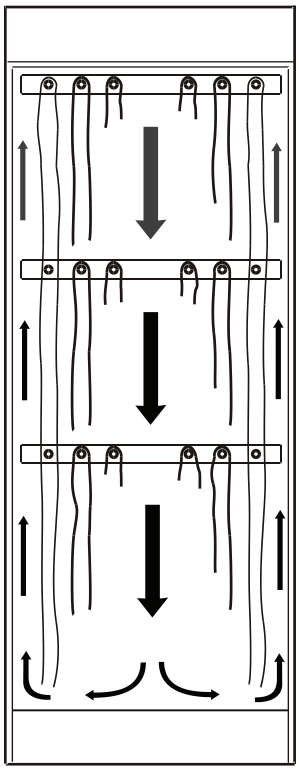

NOTE!

When the cabinet is cold it may happen that the sealing strip of the door does not close completely. However, this is fully compensated when the cabinet is operating with heat as the sealing strip expands.

DRYING PROGRAMS

This drying cabinet is equipped with **automatic programs** and **manual drying programs** for efficient drying of fabrics of different kinds.

The automatic programs automatically switch off the drying process when the fabrics are dry. During the last 10 minutes, the heat is switched off while the fan cools down the fabrics (cool-down period).

The manually time-controlled programs stop after a set time has been counted down. Cooling also takes place in the last 10 minutes of drying time in this case.

AUTOMATIC PROGRAMS

- **Aut 104°F (40°C) Normal dry.** NFPA 1851 Program for drying PPE shells and liners.
- **Aut 104°F (40°C) Extra dry.** NFPA 1851 Program for drying PPE shells and liners.
- **Aut 140°F (60°C) Normal dry.** Miscellaneous station wear and gear.
- **Aut 140°F (60°C) Extra dry.** Miscellaneous station wear and gear.

MANUAL PROGRAMS

- **Man 86°F (30°C).** Sensitive fabrics that cannot be exposed to temperatures above 86°F (30°C)
- **Man 104°F (40°C).** NFPA 1851 Program for drying PPE shells and liners
- **Man 140°F (60°C).** Miscellaneous station wear and gear.
- **Man --.** Fan Only / No Heat

NOTE!

It is very important to follow the laundry instructions for the fabrics concerned when selecting the drying program.

©Groves Incorporated 2024

CHILD LOCK

To make sure that the drying process is not interrupted or started by mistake, a child lock function can be activated.

FUNCTION OF THE CHILD LOCK

Activation buttons must be held down for a least 3 seconds (delay time).

ACTIVATION/DEACTIVATION OF CHILD LOCK

The child lock is activated and deactivated via a setting parameter (see the chapter “SETTING DRYING PROGRAMS/Parameter list”). When this function is activated, a clock symbol appears on the display.

START AUTOMATIC PROGRAM

Start the cabinet by pressing **ON/OFF**.
The display lights up and shows the last program used.

E.g.	AUT 104° NORMAL DRY	The text flashes.
	If this is OK - **press OK**	and the process will then start.
		– or select another program with **UP / DOWN ARROW + OK** and the process will then start.

STARTING A MANUAL PROGRAM

Start the cabinet by pressing **ON/OFF.**
The display lights up and shows the last program used

E.g.	MAN 104°	The text flashes.
	If this is OK - **press OK**	the default or last used drying time flashes,
E.g.	2:30 (two hours, 30 minutes)	
	If this is OK - **press OK**	the process starts at once, in this example, Man 104°F (40°C) program where the time is counted down from 2½ hours.
		– or select a different drying time with **UP ARROW** (increases drying time) **DOWN ARROW** (reduces drying time) + **OK** the process starts with a Man 104°F (40°C) program with a new drying time.

A different manual drying program is selected in the same way as above.
If the child lock is activated, hold this button down for at least 3 seconds.

FACTORY-SET DRYING TIMES FOR MANUAL PROGRAMS

Man 86°F (30°C) 2:30 (two hours, 30 minutes)
Man 104°F (40°C) 2:30
Man 140°F (60°C) 2:30

©Groves Incorporated 2024

USER ADVICE

- If you have made a mistake or are unsure where you are, you can always press **ON/OFF** and start selecting drying program again.

- If the door is open when a drying program is started and the **OK** button is activated, the display will show “close door”. Close the door, and the selected drying program will start.

- The **animated symbol** (bar) on the left side of the display indicates that the drying process is in progress.

- When the drying process has finished, the display shows the text “end” (flashing). When the **STOP** button is then pressed, or the door is opened, the current program ends and the display shows the last used program.

- **NOTE: In standby mode the display goes off after 15 minutes and lights up when any of the buttons on the control panel is activated or the door is opened.**

- To halt a drying process in progress, press **STOP.**

- If the door is opened while the drying process is in progress, the fan will continue operating for another 5 minutes. The display shows “close door” and counts down the 5 minute program pause period.

  If the door is closed within this 5 minute period, the drying process will restart.

  If the door is left open, the drying process will stop after 5 minutes and must be restarted manually.

  If you wish to stop the drying process immediately, without a 5 minute period, press **STOP.**

©Groves Incorporated 2024

CARE

CLEANING

NOTE!

Do not use high-pressure cleaning.

- Clean the walls of the cabinet with a mild soap solution on a damp cloth.

- Dust tends to collect around the air intake on the top of the cabinet. This can cause disruption, in turn leading to breakdowns in operation.

  To avoid these problems, the air intake and the roof of the cabinet should be vacuumed at least once a year, or more often depending on the environment the cabinet is positioned in.

REPLACEMENT PART

If the power cord for any reason is damaged, it must be replaced. A genuine spare part can be obtained from the dealer who supplied the cabinet.

NOTE!

A replacement cord may be installed only by the manufacturer, the manufacturer's service agent or other qualified electrician.

NOTE!

Cleaning and maintenance must not be performed by children without supervision.

©Groves Incorporated 2024

OVERHEAT CUT-OUT

The cabinet is equipped with an overheat cut-out.

This trips when the temperature in the fan unit exceeds 248°F (120°C).

When the overheat cut-out triggers, the display dims down and pauses the ongoing program.

1. You reset the overheat cut-out by turning OFF the power supply with the switch inside the roof of the cabinet. See illustration.

2. You must then wait 15 to 20 minutes before the temperature has fallen.

3. Now you can reset the overheat cut-out by turning ON the power supply with the switch inside the roof of the cabinet. See illustration.

If the overheat cut-out triggers again when you start a program, redo step 1, 2, 3 above.

If overheat cut-out triggers several times, call for service.

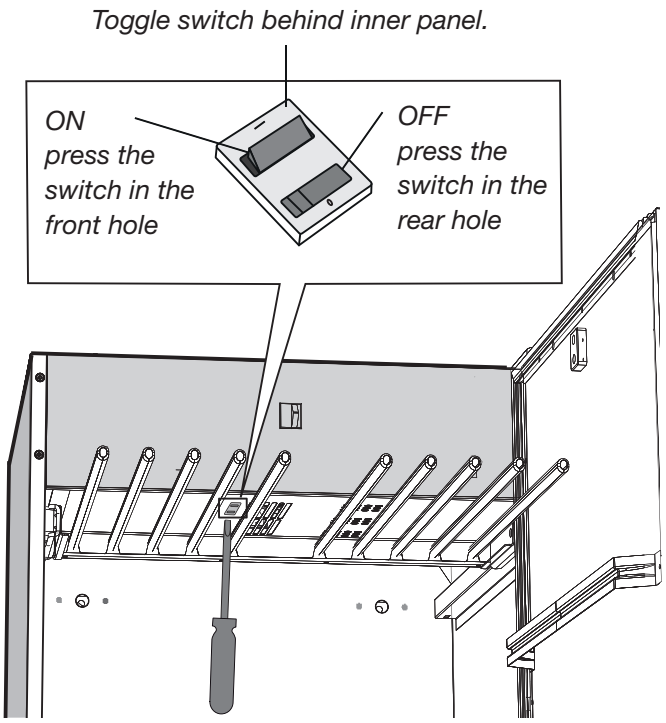

Hole in inner panel for operation of the toggle switch with a screwdriver or similar tool.

TROUBLESHOOTING

DEAL WITH MINOR FAULTS YOURSELF

Problem	What you can do
The drying cabinet is not working	1. Check that the power cord is connected to a outlet. 2. Check that no breaker has tripped. 3. Have you pressed the start button? 4. Is the door closed?
The display shows an alarm/ error code	This should normally not happen, but if an alarm or error code appears, first try to reset the alarm by holding the START/ STOP button down for 5 sec. If the problem persists, a service technician must be called in.
Drying takes a long time	1. Check that the correct program has been selected for the type of laundry. 2. Check that the laundry is not very wet (poorly spun). 3. Check that too much laundry has not been hung.
The sealing strip does not close tightly/the door is ajar	Check that the cabinet is level. Check with a spirit level, if necessary adjust with the adjustable feet.

©Groves Incorporated 2024

SERVICE AND WARRANTY

3 Years Limited Warranty on Ready Rack VORTEX DC2 Drying Cabinet

What Groves Inc. limited warranty covers and for how long

This limited warranty is extended to the first owner or by warranty transfer to a new owner of a Groves, Inc. drying cabinet. Groves, Inc. will provide a free replacement for any of the following parts which fails as a result of a defect in material or workmanship for the period shown below from the date of purchase:

Groves, Inc.'s limited warranty covers all parts that fail during normal use under the limitations further described below. Groves, Inc.'s obligation under this warranty shall be limited to exchanging any part of said product that, in the judgment of Groves, Inc., shows evidence of premature failure. All warranty should be processed through Groves, Inc. at the time of failure. This Limited Warranty is valid only when the Groves, Inc. product is used in the country in which it was purchased. Proof of original purchase date is required to obtain service under this Limited Warranty.

- 3-YEAR (36 MONTHS) LIMITED WARRANTY ON COMPLETE DRYING CABINET AND PARTS
- TECHNICAL SUPPORT
  Groves. Inc. provide complimentary technical support, available during regular business hours, for the life of our products.
- This warranty must be registered with Podab, Inc. within three (3) years from date of purchase to be eligible. Machine warranties can be registered online at the www.podab.us website.
- This warranty extends to the first owner, or by warranty transfer to new subsequent owner(s) in the original location for the remaining warranty period from the date of purchase from Groves, Inc.
- Groves, Inc. assumes no responsibility for labor costs, transportation charges, local duties or taxes associated with warranty parts.
- This warranty shall not apply to any product which has been altered in any way so as, Groves, Inc.'s judgment, to affect its performance, or which has been subject to any abuse, misuse, negligence, chemical damage, improper installation, damage caused by line voltage exceeding factory recommended specifications or any other occurrence beyond the control of Groves, Inc.
- Attempted repair by any person other than an authorized Groves, Inc. service company will void this Limited Warranty.
- This warranty shall not apply to any product on which the serial numbers have been altered, defaced, or removed.
- This warranty shall not be applicable to any product for which replacement parts have been sourced from a supplier other than the original Podab, Inc parts source.
- This warranty shall not apply if installation of drying cabinet does not correspond to the installation instruction in the installation manual included in each drying cabinet package upon receival. Digital installation manuals are also listed for the owner(s) on www.podab.us.
- Groves, Inc. reserves the right to make changes in design or make additions or improvements upon this product without incurring any obligations to install the same on products previously manufactured.
- The warranty provided hereunder and the obligations and liabilities of Groves, Inc. as set forth herein are exclusive and purchaser hereby waives all other remedies, warranties, guarantees or liabilities, expressed or implied, arising by law or otherwise (including without limitation any obligations of Groves, Inc. with respect to fitness, merchantability and consequential damages) or whether or not occasioned by Groves, Inc. negligence. This warranty shall not be extended or altered unless specifically agreed to in writing by Podab, Inc., located in Sarasota, FL. and the warranty holder.

©Groves Incorporated 2024

What Groves limited warranty does not cover

Groves, Inc. will not provide a replacement of any part which fails for reasons other than defective material or workmanship. This includes, but is not limited to, failure as a result of abuse, misuse, improper installation and transportation damage. Groves, Inc. will not pay labor and transportation charges incurred in the replacement of any part. Groves, Inc is not responsible for any consequential and incidental damages resulting from any malfunction.

How to obtain replacement parts under Groves limited warranty

Parts which fail within the warranty period must be ordered from your Groves. Inc, Woodstock, parts source. Proof of purchase, model number, serial number and defective part (part return – USA only) are required in order to obtain credit.

Limitation of liability

IN NO EVENT SHALL GROVES, INC. OR THE MANUFACTURER AND THEIR RESPECTIVE PARENTS, SUBSIDIARIES AND AFFILIATES BE LIABLE FOR CONSEQUENTIAL, INCIDENTAL, EXEMPLARY, PUNITIVE OR SPECIAL DAMAGES. IN NO EVENT SHALL GROVES, INC OR THE MANUFACTURER AND THEIR RESPECTIVE PARENTS, SUBSIDIARIES AND AFFILIATES BE LIABLE FOR DAMAGES OTHER THAN ACTUAL DAMAGES AND IN NO EVENT FOR DAMAGES IN EXCESS OF THE PRICE PAID FOR THE GROVES, INC PRODUCT AS TO WHICH A CLAIM IS MADE. Some jurisdictions do not allow the exclusion or limitation of incidental, consequential or other damages, so these limitations and exclusions may not apply to you. This Limited Warranty gives you specific legal rights. You also may have other rights that vary from jurisdiction to jurisdiction.

Groves customer care

If you have encountered a problem that you cannot resolve, please contact Groves, Inc.

www.readyrack.com
+1 (800) 991-2120
appliancesupport@groves.com

When making contact, provide the details on the serial number plate. Include the product number (1) and the serial number (2).

Service after expiration of limited warranty

For information about obtaining parts and labor after expiration of this Limited Warranty or arising outside the scope of this Limited Warranty, please contact Groves Customer Care.

©Groves Incorporated 2024

SERVICE

Before contacting Service, you should find out the name, product number and serial number of the drying cabinet.

This information can be found on the drying cabinet located upper left side wall inside the cabinet.

Service after expiration of limited warranty
For information about obtaining parts and labor after expiration of this Limited Warranty after or outside of expiration of this Limited Warranty, please contact your dealers Customer Care.

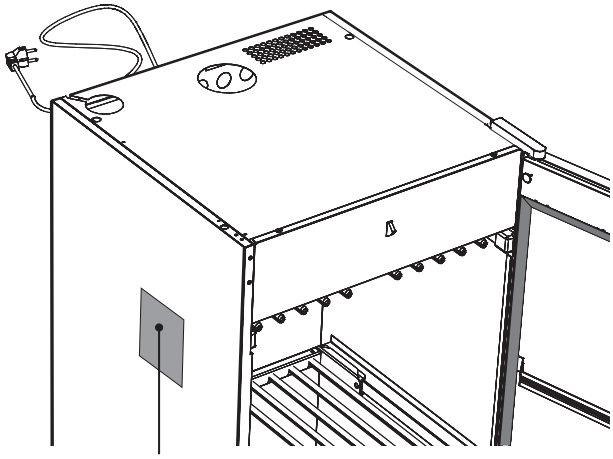

Identification plate (inside)

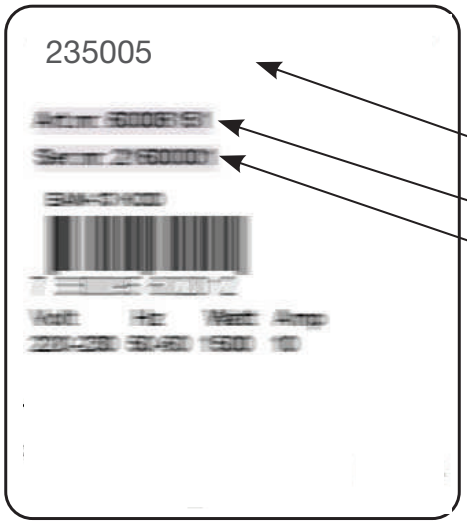

Name of the drying cabinet
Article number
Serial number (12 digits)

Identification plate for drying cabinet model 235005

TECHNICAL DATA

Machine Type		**Drying Cabinet**
Product Name		**VORTEX DC2**
Product No.		235005
Warranty		3 years limited
Main Data		
Type		Air vented
Capacity (dry weight)	lbs / kg	13.2 / 6
Hanging length	ft / m	52.5 / 16
Dewatering capacity	oz/min / g/min	0.59 / 17
Languages		10
Noise emission	dB(A)	60
Overheat protection		YES
Electrical Installation		
Supply voltage	V	110-120 V, 60Hz
Total effect	kW	1.3
Protection	A	13
Dimensions		
Outer: width x depth x height	in / mm	23.4 x 25 x 73 / 595 x 635 x 1855
Minimum ceiling height, in / mm	in / mm	90.6 / 2300
Weight		
Weight	lbs / kg	138.9 / 63
Shipping weight	lbs / kg	143 / 65
Ventilation		
Outlet exhaust	Ø in / mm	3,93 / 100
Outlet air flow	cfm / m^3/h	55.9 / 95
Fan capacity	ft^3/hour / m^3/hour	6356 / 180

MANUFACTURING STANDARD

See cabinet rating plate.

WIRING DIAGRAM

Wiring diagram can be ordered from the manufacturer.

IDENTIFICATION PLATE

See the chapter “SERVICE AND WARRANTY/Service”).

©Groves Incorporated 2024

ACCESSORIES

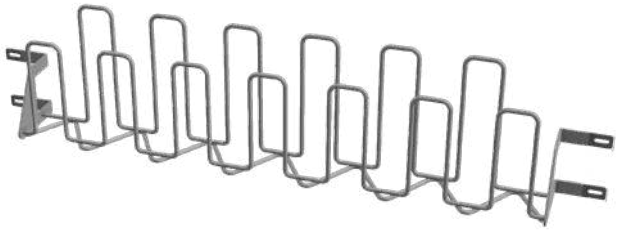

Product name	Door hooks
Product no.	002899

Product name	Door bar
Product no.	000890

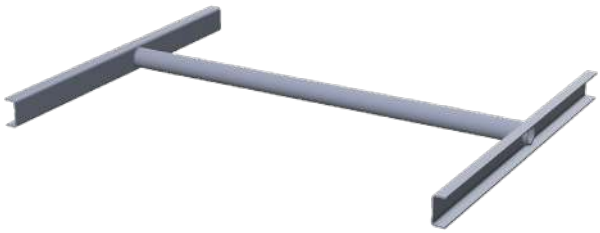

Product name	Single bar
Product no.	131005

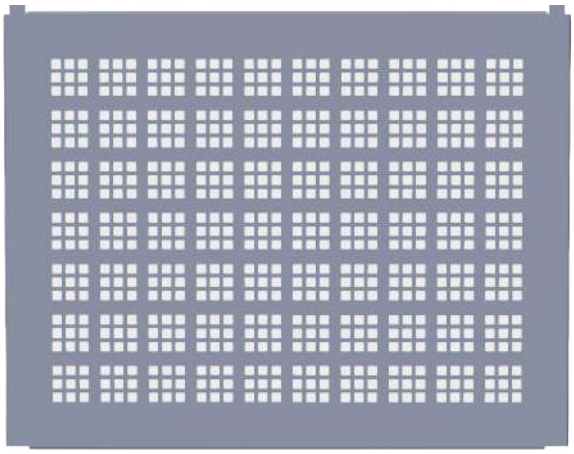

Product name	Ventilated shelves
Product no.	131006

©Groves Incorporated 2024

SERVICE/SUPPORT

Email: appliancesupport@groves.com
Service phone number: 800-991-2120
www.readyrack.com

PODAB Inc. 235001

PODAB Inc. 235001

Groves Incorporated
818 Trakk Ln.
Woodstock, IL. 60098, USA.
sales@groves.com
www.readyrack.com
+1 (800) 991-2120

Copyright ©Groves Incorporated. All rights reserved.
Subject to change without notice.

Product Number: 235005